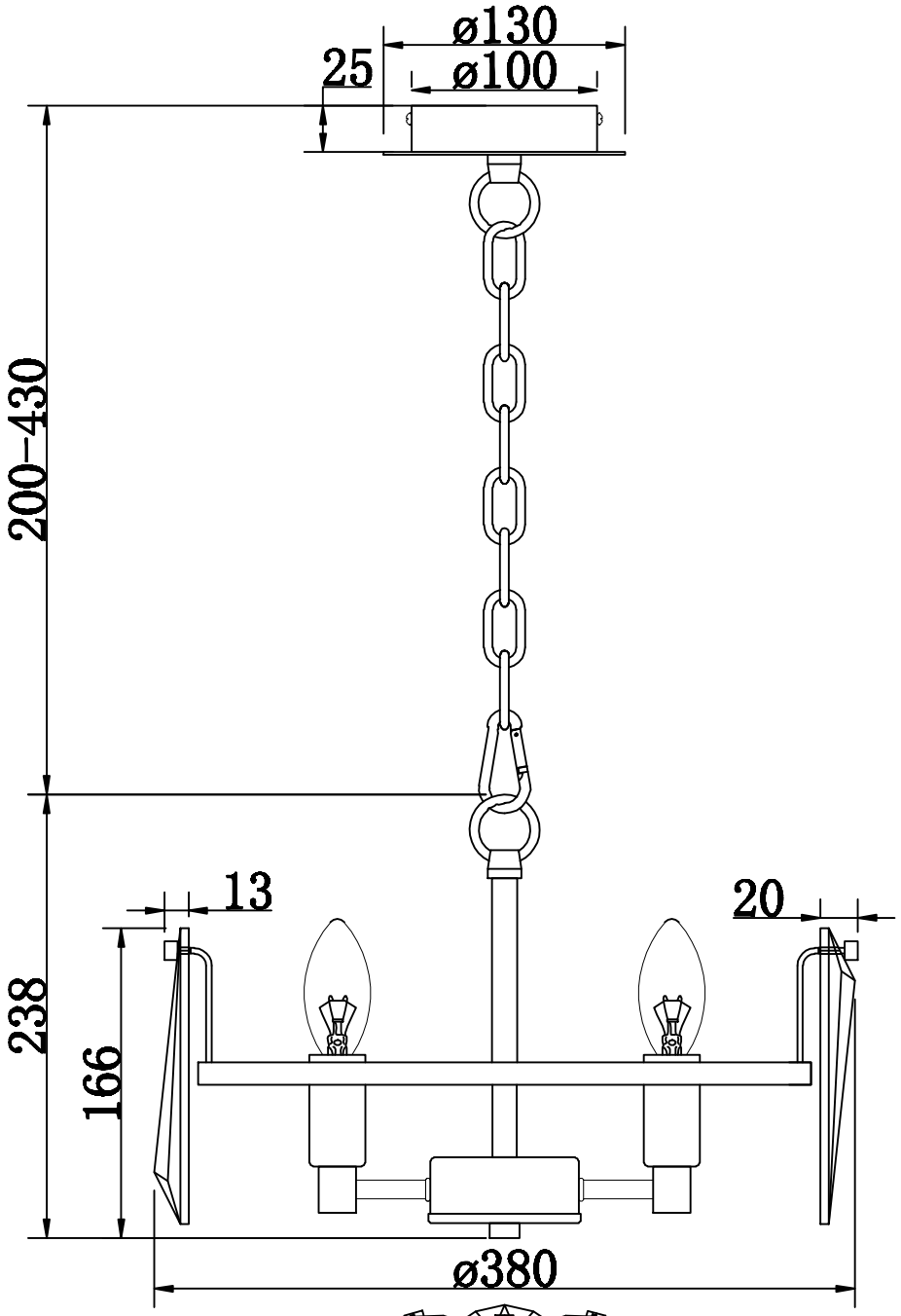
ø130
25
ø100
200-430
13
20
238
166
ø380

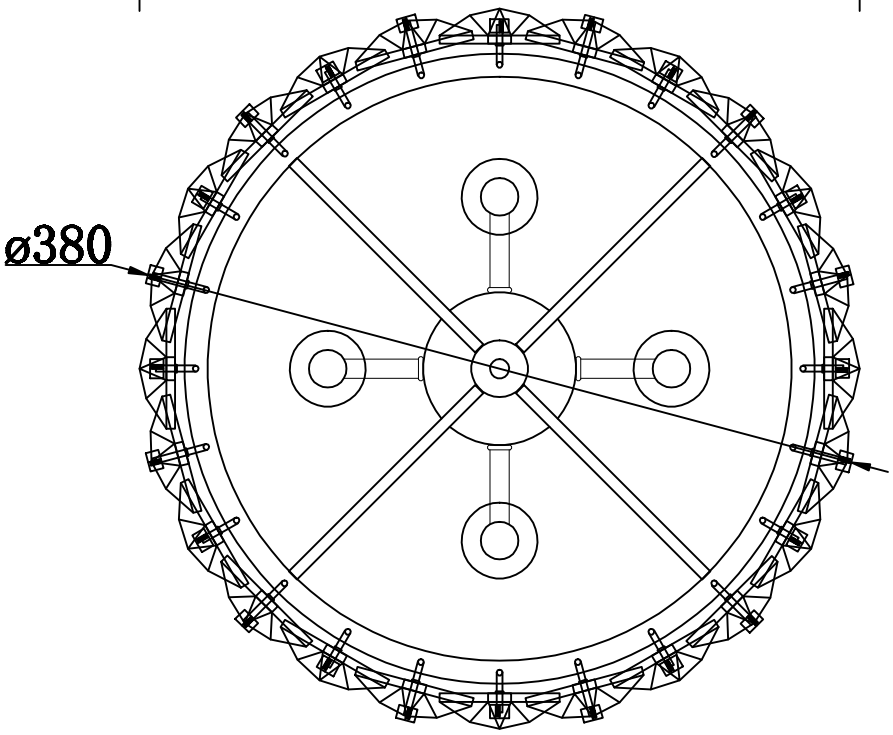
ø380