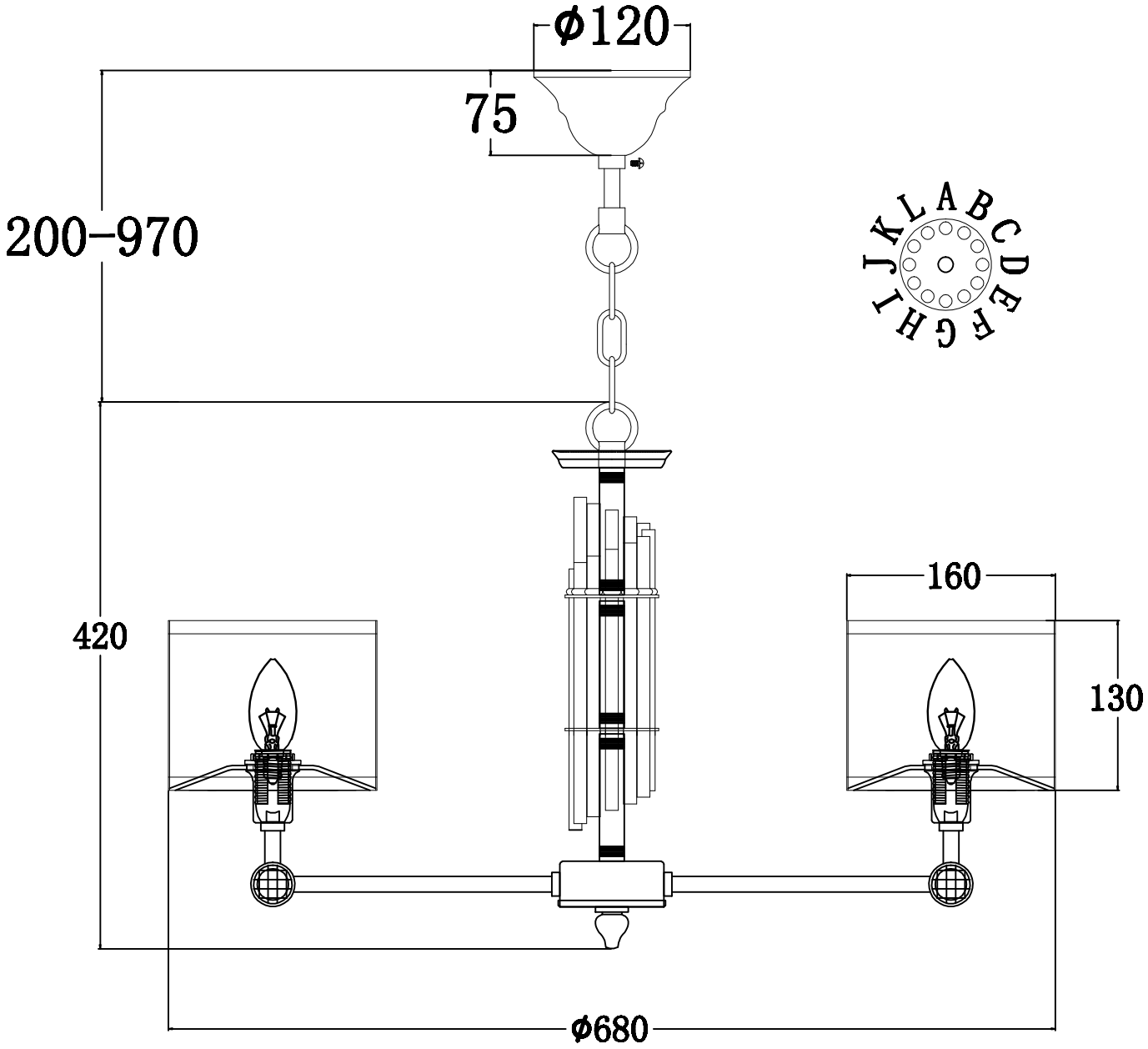
ϕ120
75
200-970
A
B
C
D
E
F
G
H
I
J
K
L
160
420
130
ϕ680